

SST-40-EIH | ARTICULATED TELESCOPIC

BUILT FOR TIGHTER WORK AREAS.

The SST-40 combines articulating and telescoping boom movement in a compact insulated package designed for utility work.

Built to help crews access hard-to-reach areas while maintaining maneuverability and productivity.

ACCESS MORE
Reach difficult work areas without constant repositioning.

- 45 ft working height
- 27.9 ft horizontal reach
- Reach over and around obstacles

INSULATED DESIGN
Built for utility work where insulation, reliability, and operator protection matter.

- Category C insulated boom
- 42 in insulation gap
- TruGuard ® upper controls isolation

COMPACT. MANEUVERABLE. PROVEN.
The SST-40 combines articulating and telescoping boom movement in a compact package designed for utility work.

Its compact boom design helps crews work efficiently in urban and residential environments.



INDUSTRIES

Municipalities | Electric Utilities | Co-op

SPECIFICATIONS

Horizontal Reach	27 ft 9 in (8.5 m)
Maximum Platform Capacity	450 lbs (204 kg)
Inner Boom Extension	116 in (2.9 m)
Outer/Inner Boom Articulation	-14° to +74°
Lower Boom Articulation	81°
Rotation	370° Non-Continuous

WITH STANDARD PEDESTAL	
Height to Bottom of Platform	40 ft 0 in (12.2 m)
Working Height	45 ft 3/4 in (13.7 m)
Stowed Travel Height	10 ft 4 in (3.15 m)

INSULATION GAP	
Upper Boom Fully Retracted	42 in (1.07 m)
Lower Boom	12 in (0.3 m)

HYDRAULIC SYSTEM	
Operating Pressure	2250 psi (155 bar)
Flow Rate	5 gpm (18.9 lpm)
System Type	Open Center

800-825-1085
Versalift.com

Note: Specifications on units may vary or change without prior notification due to option selections.

SST-40-EIH | ARTICULATED TELESCOPIC

REACH DIAGRAM

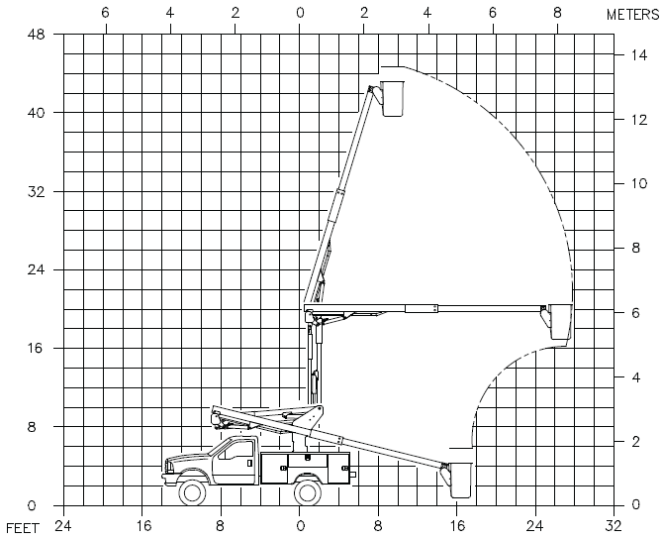

OPTIONS

Outfit your SST-40 for the way your crews work. From added stability to enhanced access and material handling, these options help configure the right setup for the job.

- Auxiliary Outriggers
- Tool Power at Platform
- Platform Rotator
- Available Material Handling Jib
- Hydraulic Tool Circuits
- Lower Controls Cover
- Automatic Boom Latch
- Various Chassis Configurations

THE VERSALIFT DIFFERENCE

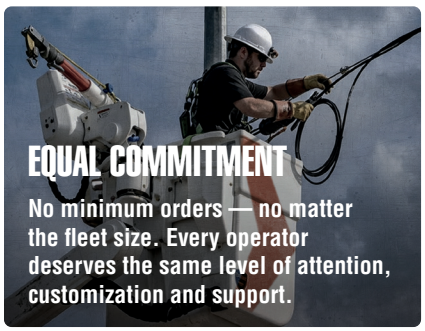





VERSALIFT
BUILT YOUR WAY

What do you need to get the job done? Versalift answers with trucks, digger derricks and cable placers built around how crews actually work. How you move, what you need and what the job demands. Delivering more payload, better efficiency and less downtime. Because when your truck is Built Your Way, the work just works.